lafonte.eu

MIX 2.0 12

FILTRATION SYSTEMS

ADVANTAGES

- Ease of operation
- Long life
- Ability to Interchange with several different filtration systems in the same housing
- Ability to change between EVOLUTE magnetic drive and mechanical seal pump
- Three years warranty on filter housing

FEATURES

- Polypropylene machine solid monobloc filter housing
- Tilt lid with swing bolts closure system
- Magnetic drive or mechanical seal pump
- Solid Polypropylene base with discharge pipes and brackets on three side of the base
- Pre coat tank version
- Discs version, filter papers: D256/50 mm
- Filter housing improved distribution flow
- Tmax exercise 70°C with 3 Bar pressure

FILTRATION TYPE

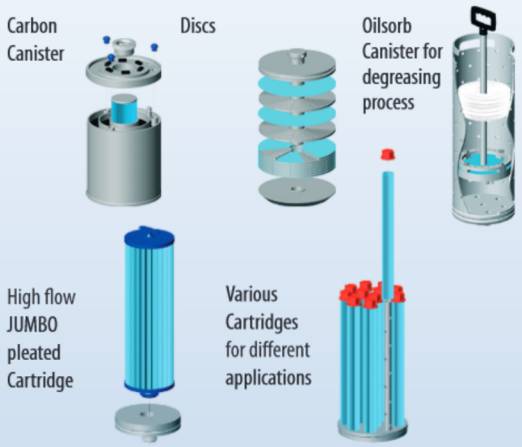

Series	Filter Chamber					Filter Element		Pump			OPTIONAL
	Discs Dxn° (m^2/l)*	Cartridges n° x l"	JUMBO DxH" (m^2)	Oilsorb (l)	Carbon (l)	Discs	Cartridges	Magnetic Drive	Mechanical Seal	Material	**A** = Suction Valve **M** = Discharge **B** = By pass pump/filter **C** = Carbon treatment valves group **G** = Pressure Guage **V** = Valve between pump and filter **T** = Prea coat tank **W** = Wheels **I** = Interlock sensor placed on splashproof lid ring
MIX	**12D1** 250x33 (1,5/7,2)	**12C1** 12x10	**12J1** 250x10 (4)			_ = carta **P**= Meraklon **T**= PTFE	_= DOE D63 **M**= DOE with spring closure system **P**=DOE D 70 **A**=SOE 222 **B**=SOE 226	**EVT7** **EVT12**	**EVM8** **EVM12**	_=PP **F**= PVDF	
	12D2 250x66 (3/14,4)	**12C2** 12x20	**12J2** 250x20 (8)	**12 O2** (20)	**12A2** (20)			**EVT12** **EVT15** **EVT20**	**EVM12** **EVM15** **EVM20**		
	12D3 250x100 (4,5/21,6)	**12C3** 12x30						**EVT15** **EVT20** **EVT25**	**EVM15** **EVM20**		
MIX	**12 O2**							**EVM15**			**GR**

* m^2 = Surface area / l = Sediment Volume

STANDARD VERSION

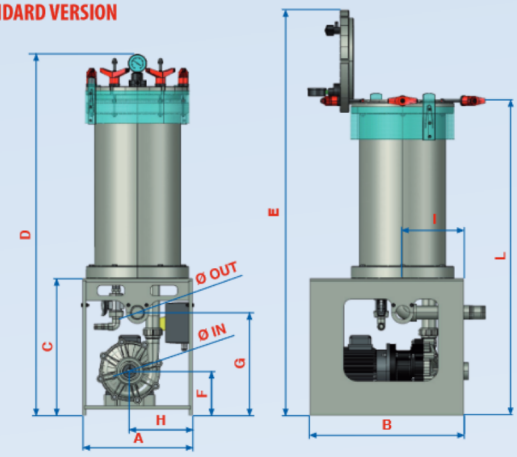

PRECOAT TANK VERSION

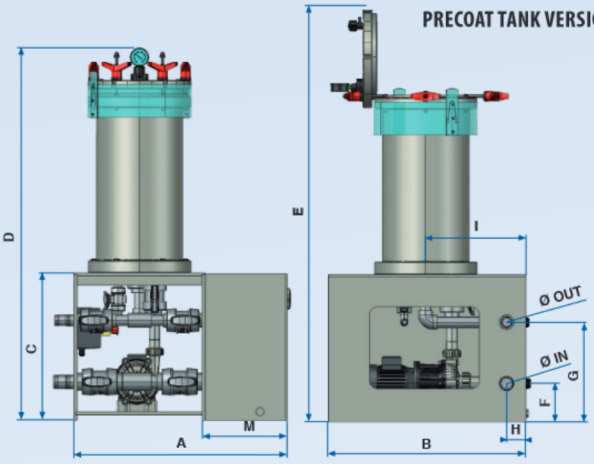

SERIES	HOUSING	PUMP	OVERALL DIMENSION												
			D in	D out	A	B	C	D	E	F	G	H	I	L	M
MIX	12D1 12C1 12P1	EVT7	32	32	395 720	500 560	350 420	895 965	1060 1130	117	290 300	158 65	207 270	785 805	300
		EVM8	40 50	40 50	395 770	560 680	450 500	995 1045	1290 1340	145	315 355	173 90	220 325	835 885	
		EVT12 EVM12	50	50											
	12D2 12C2 12P2 12O2 12A2	EVT12 EVM12 EVT15 EVM15	50	40	395 770	560 680	450 500	1250 1300	1545 1595	145	315 355	173 90	220 325	1090 1140	300
		EVT20 EVM20	50	50											
	12D3 12C3	EVT15 EVM15	50	40	395 770	560 680	450 500	1570 1620	1710 1770	145	375 365	173 70	220 325	1380 1430	300
		EVT20 EVM20	50	50											
		EVT25 EVT30	63	63	395 860	590 750	500 570	1620 1690	1760 1830	162	365	198 90		1430 1500	

50 Hz

Rpm 2800	EVT7	EVM8	EVT12 EVM12	EVT15 EVM15	EVT20 EVM20	EVT25 EVM25	EVT30 EVM 30
KW	0,25	0,37	0,55	0,7	1,1	1,5	2,2
A* 230/400V	1,2/0,7	1,8/1,0	2,3/1,25	3,13/1,7	4,9/2,5	6,5/3,8	8,7/5,0

* Values could change according with type of used motor

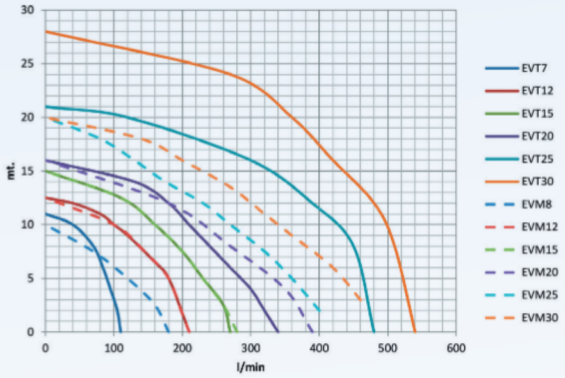

60 Hz

Rpm 3450	EVT7 EVM8	EVT12 EVM12	EVT15 EVM15	EVT20 EVM20	EVT25	EVT30
KW	0,37	0,55	0,7	1,1	1,5	2,2
A* 220/380V	2,6/1,5	2,9/1,7	3,9/2,2	6,0/3,5	8,0/4,6	10,2/6,0

* Values could change according with type of used motor

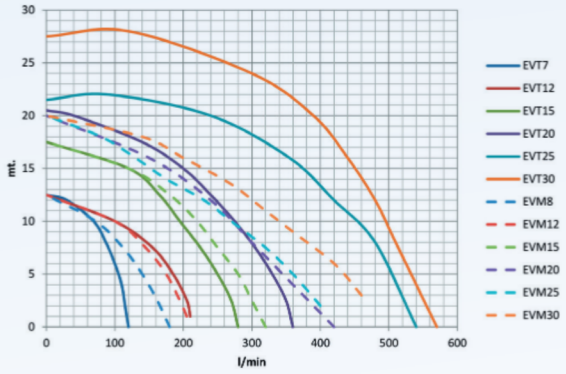

lafonte.eu P.le Cocchi, 2 - 21040 Vedano Olona (VA) Italy - Tel. +39 0332 402168 Fax +39 0332 402169 - info@lafonte.eu - www.lafonte.eu